PB1319 Fiber Coupled Terahertz Photomixers



Applications

- Signature Recognition
  - Biologicals
  - Chemicals
- Molecular Spectroscopy
- Solid State Spectroscopy
- THz Imaging
- Materials Characterization
- THz CW Generation & Detection

Features

- Rugged package design with all welded construction
- Polarization maintaining fiber coupled
- Internal optical focusing lens for optimal performance
- Hi resistivity hyper-hemisphere for low loss coupling to free-space
- Integrated 50 V Zener diodes for ESD protection (n/a cryogenic)
- APC connector for high return loss
- Operation at 780 nm to 855 nm
- Available with SM05 threaded waveguide coupler
- Cryogenic devices in non-magnetic 316SS frames
- Custom configurations available

Typical Configuration

Terahertz Photomixers

The PB1319 family of terahertz photomixers combines the proven performance of low-temperature-grown gallium arsenide (LT-GaAs) with a rugged, fiber-coupled package. The laser-welded assemblies incorporate an optical lens for the pump lasers and a silicon THz lens for free-space coupling. PB1319 photomixers have demonstrated reliability at temperatures as low as 4.5 K.

These photomixers are used in coherent systems for both the generation and detection of terahertz radiation. Available in room-temperature and cryogenic versions, either can be equipped with an SM05-threaded frame for half-inch optics or an SMA waveguide adapter. Custom mounts and divergent or collimating silicon THz lenses are also available.

Product Specifications (Standard Photomixer)

Parameter	Min	Typical	Max	Units
Operating Case Temperature*	-40	25	+85	°C
Operating Optical Wavelength	760	-	855	nm
Effective THz Spectrum	100	-	3000	GHz
Dark Current @ 20 V Bias, 25°C	-	0.3	.5	µA
Bias Voltage on Transmitter	-	±20	±25	V
Dynamic Range*** @ 100 GHz @ 1000 GHz @ 2000 GHz	- - -	70 50 30	- - -	dB
Average Optical Pump Power	-	30	40	mW

Product Specifications (Low Temperature Photomixer)

Parameter	Min	Typical	Max	Units
Operating Case Temperature*	4.5	300	355	K
Operating Optical Wavelength	760	-	785	nm
Effective THz Spectrum	100	-	3000	GHz
Dark Current @ 20 V Bias, 25°C	-	0.3	.5	µA
Bias Voltage on Transmitter	-	±20	±25	V
THz Power @ 200 GHz**	.02	0.1	0.5	µW
Dynamic Range*** @ 100 GHz @ 1000 GHz @ 2000 GHz	- -	70 50 30	- -	dB
Average Optical Pump Power	-	30	40	mW

* Non-condensing atmosphere
** Pumped with 30 mW @ 780 nm and biased to 500 uA photocurrent
*** In a photomixing system like the PB7300 and dependent upon laser source

Information contained herein is deemed reliable and accurate as of the issue date. BAKMAN TECHNOLOGIES reserves the right to change the design or specification at any time without notice

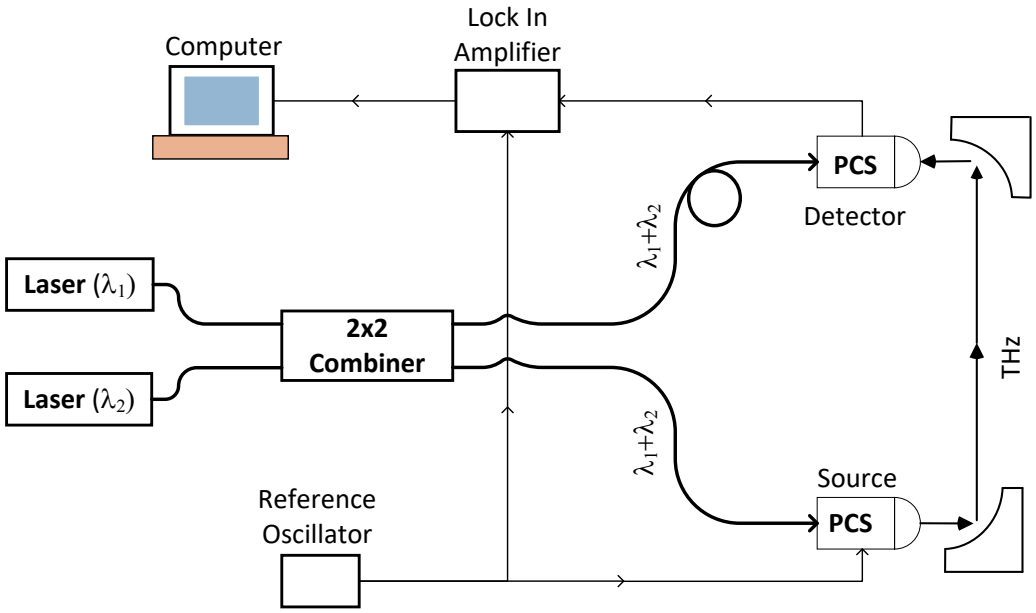

Typical Performance

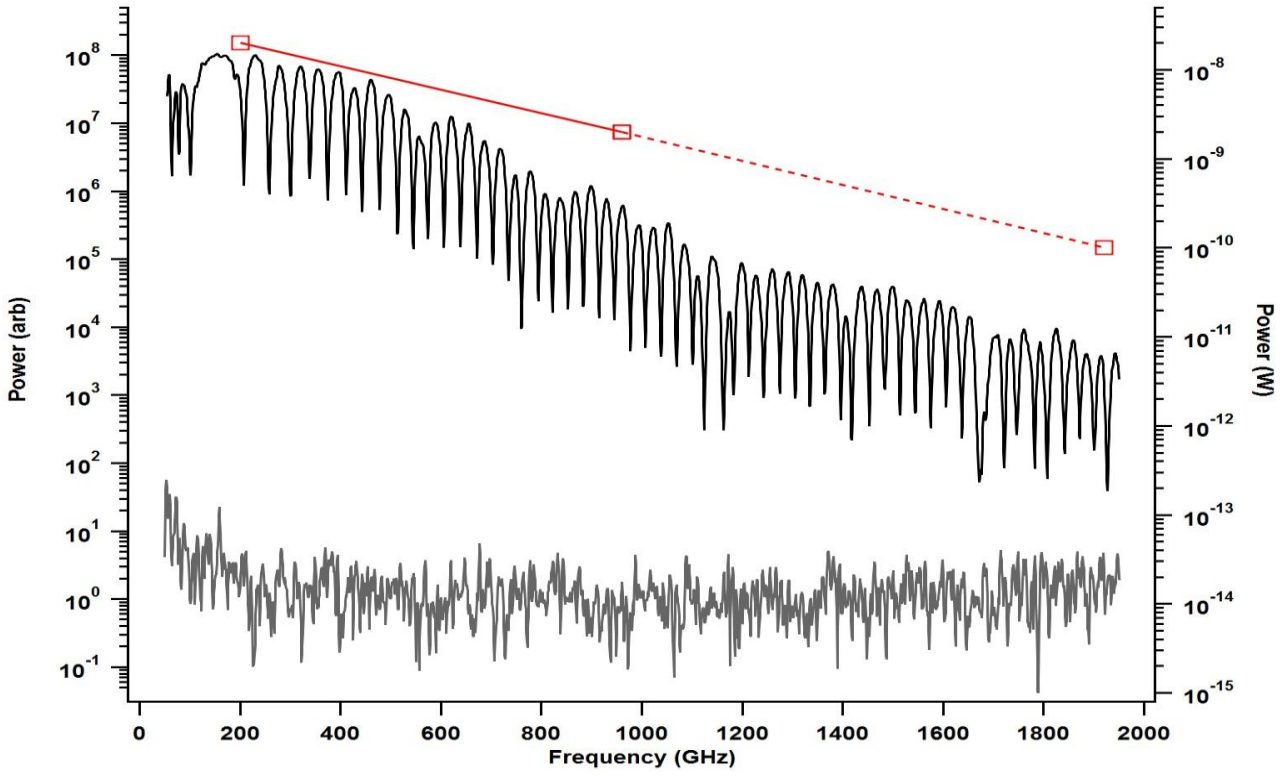

Typical performance when two photomixers are employed as in a PB7220 Series spectrometer. The noise level power illustrated by blocking the THz beam is due to the lasers. Higher spectral purity lasers will improve the dynamic range. The interference fringe due to the coherent detection is in grey and has been smoothed away.

Information contained herein is deemed reliable and accurate as of the issue date. BAKMAN TECHNOLOGIES reserves the right to change the design or specification at any time without notice

Mechanical Dimensions – Standard

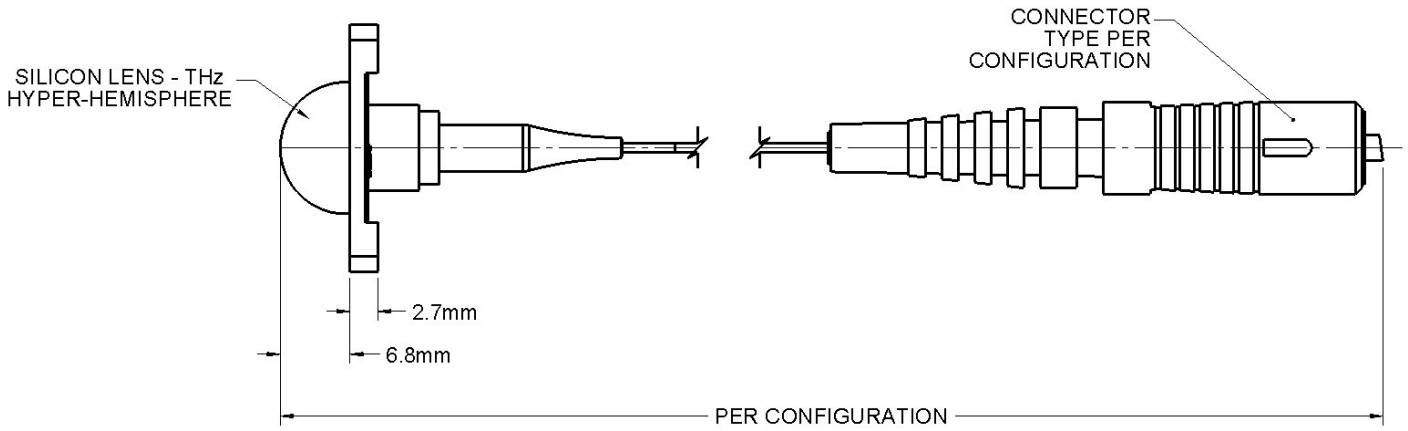

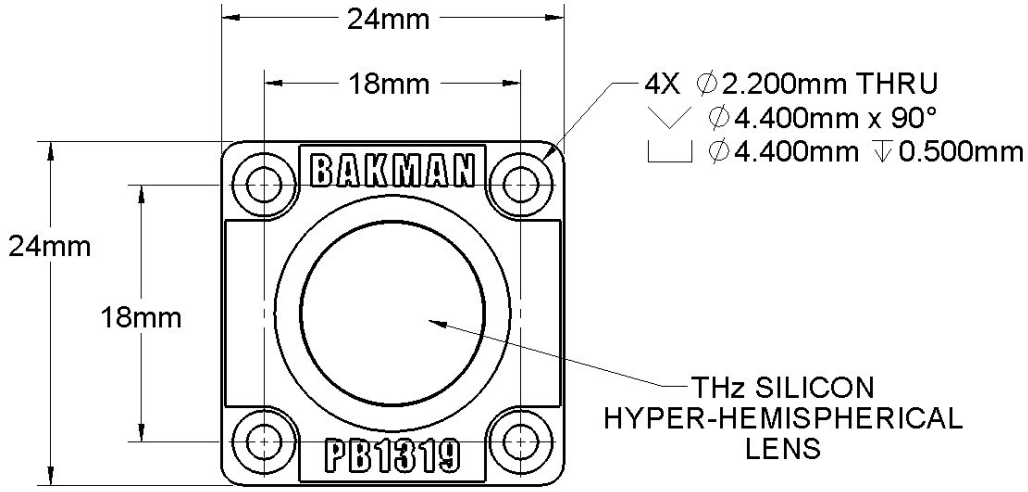

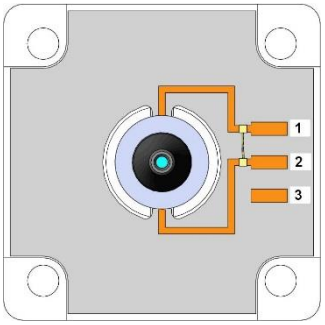

Pin	Description
1	Bias Lead 1
2	Bias Lead 2
3	Case GND

Notes:

- Terminals are ESD protected with back-to-back 30V Zener diodes
- Maximum emitter bias of 25 volts (Zeners will prevent higher bias)
- Zeners may be disconnected for higher bias but will void warranty

Information contained herein is deemed reliable and accurate as of the issue date. BAKMAN TECHNOLOGIES reserves the right to change the design or specification at any time without notice

Mechanical Dimensions – SM05 Frame – Low Temperature

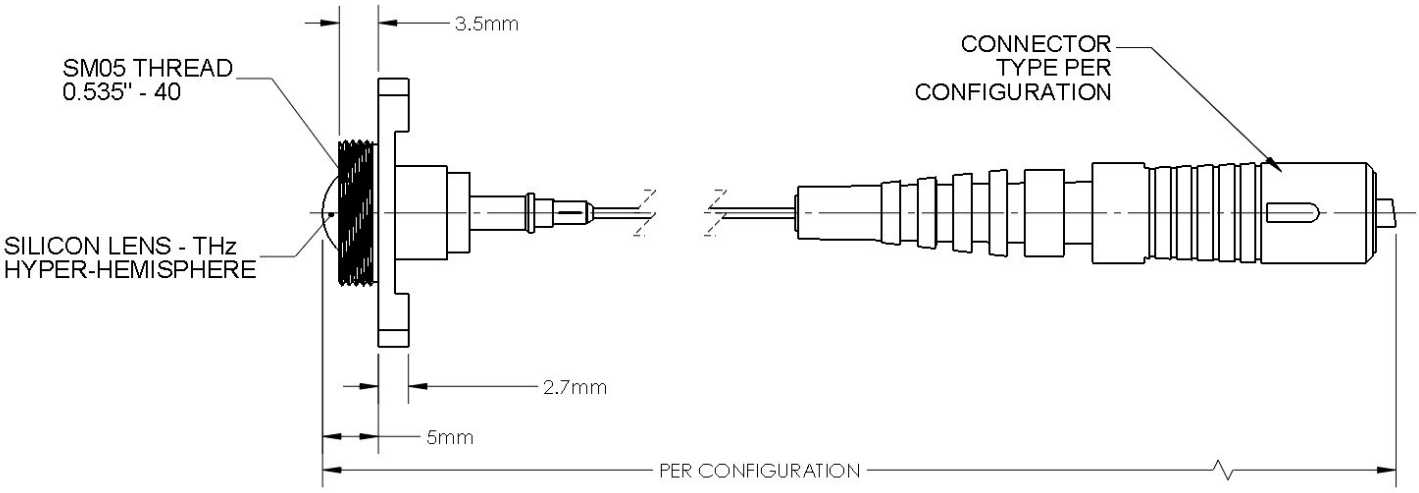

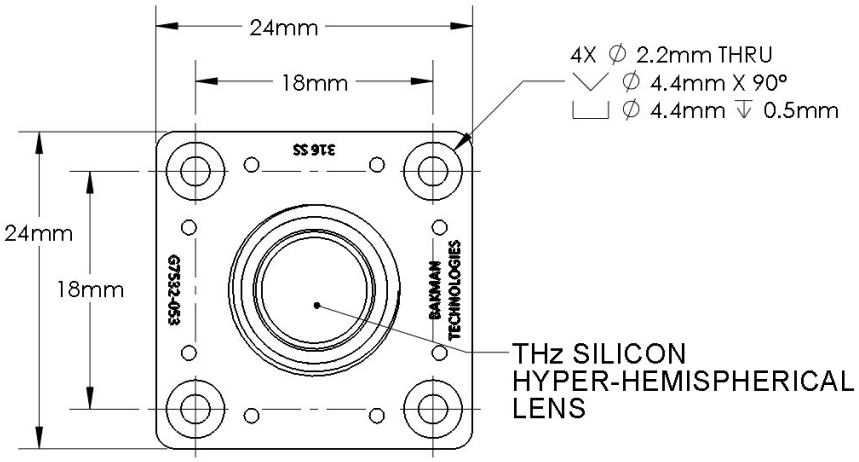

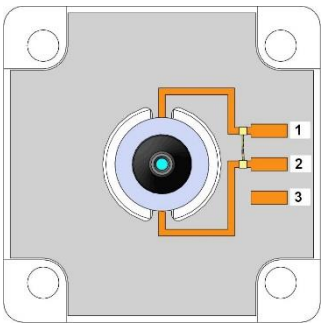

Pin	Description
1	Bias Lead 1
2	Bias Lead 2
3	Case GND

Notes:

- Terminals are ESD protected with back-to-back 30V Zener diodes
- Maximum emitter bias of 25 volts (Zeners will prevent higher bias)
- Zener wire-bonds must be removed before cold temperature use

Information contained herein is deemed reliable and accurate as of the issue date. BAKMAN TECHNOLOGIES reserves the right to change the design or specification at any time without notice

Ordering Information – Model Number Options

PB1319-CCW-ST-SM-1.15/900

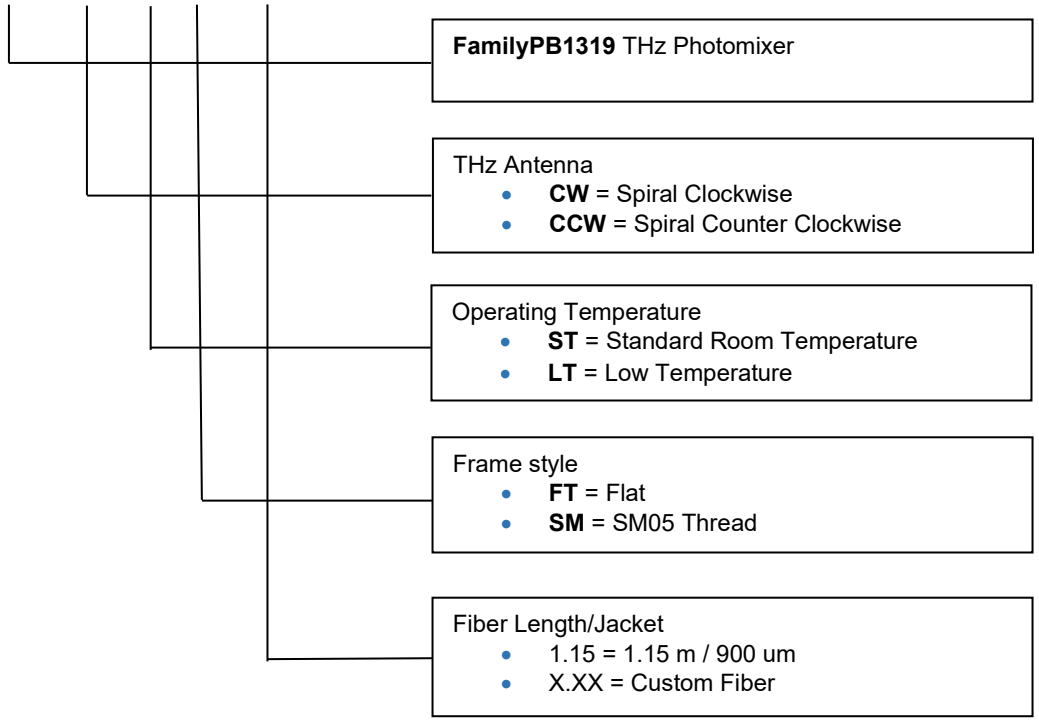

Contact Information

Dr. Joseph R. Demers
E:sales@bakmantechnologies.com
P: +1 626-993-0305
www.bakmantechnologies.com

Information contained herein is deemed reliable and accurate as of the issue date. BAKMAN TECHNOLOGIES reserves the right to change the design or specification at any time without notice